R&M MATERIALS HANDLING INC.®

SPACEMASTER® SX WIRE ROPE HOISTS

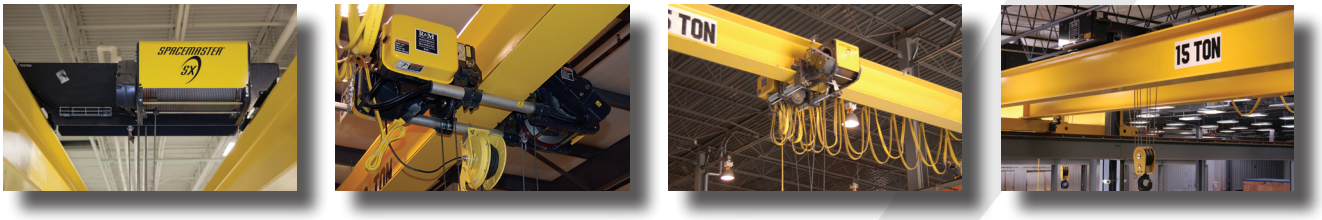

The Spacemaster® SX represents an innovative design that includes a large drum diameter giving Spacemaster® SX hoists the lowest headroom and best wheel loads in the industry while providing near true vertical lift with single reeved hoists, and both exceptional hook approaches and heights of lift.

Standard configurations include normal headroom, low headroom and double girder trolley designs. Hoists in short ton ratings (ASME) or metric ratings (FEM) meet a wide variety of application requirements:

- 1/2 - 80 ton (500 - 80,000 kg) capacities
- Lifts starting at 13ft (4m) to 320ft (100m) and beyond
- Lifting speed range 10/1.5 to 62/10 fpm (3/0.5 - 19/3 m/min)
- 208, 230, 460, 575/3/60 or 380/3/50 power supply
- Single-reeved or double-reeved
- Two-component epoxy paint
- CSA c/us rating as well as a NEMA 3R rating for electrical enclosures
- Designed to meet and exceed either ASME H3 or ASME H4 duty (FEM 1Am, 2m, or 3m) ratings

Quality assurance with all R&M equipment is very important to us. The R&M production facility is ISO9001 certified and all equipment is tested locally prior to shipment. Units are shipped with a test certificate, owner's manual and a parts list. The Spacemaster® SX unit is a CSA listed product.

c SP us

SPACEMASTER® SX WIRE ROPE HOISTS

The Spacemaster® SX wire rope hoist carries the CSA mark with the indicators “C” and “US”. This means that the product has been certified by CSA International for both the U.S. and Canadian markets, to the applicable U.S. and Canadian standards. CSA International is a Nationally Recognized Testing Laboratory (NRTL) accredited by the Occupational Safety and Health Association (OSHA) to test and certify products to U.S., Canadian and International recognized standards.

Certification from CSA International also indicates that the Spacemaster® SX wire rope hoist manufacturing sites conform to a range of compliance measures and are subject to periodic follow-up inspections to verify conformance. These same manufacturing sites are also ISO9001 certified.

Low Headroom Trolley:
- The best solution for single girder cranes
- Its compact design provides maximum space-efficiency

Double Girder Trolley:
- Superior clearance and headroom for double girder crane applications

Normal Headroom Trolley:
- An ideal selection for monorails and jib crane applications
- Hardened wheels for patented track applications are also available

Optional:
- RSN Hook

Spacemaster® SX/RX
48 hour Delivery
Call 1-800-955-9967 for details.

Special Applications
Main/Aux Trolley Hoists

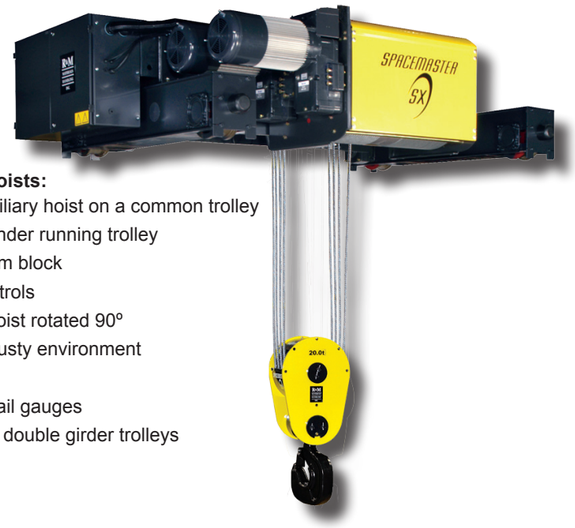

High Capacity Hoists:
- Main hoist / auxiliary hoist on a common trolley
- Double girder under running trolley
- Motorized bottom block
- Specialized controls
- Double girder hoist rotated 90°
- Outdoor use / dusty environment
- High altitude
- Special trolley rail gauges
- Low connection double girder trolleys

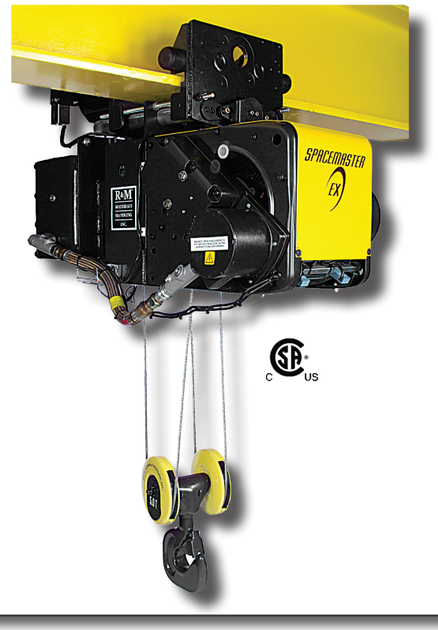

Spacemaster® EX Hazardous Location Hoists:
- Two speed hoist with 6:1 ratio
- Hoist motor is class F insulated 60% effective duty and thermally protected
- Trolley motor with compact disc brake
- Rope guide with spring loaded pressure roller
- Apporx. 40:1 drum to rope diameter ratio
- NEMA 4,7 rated control panel
- Two speed trolley with 4:1 ratio
- Push button assembly and pendant
- 115 volt control transformer
- Sealed hoist brake
- Mainline contactor
- Trolley bumpers

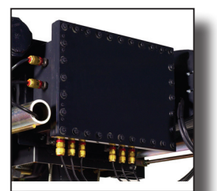

Explosion Proof Enclosure

www.rmhoist.com

www.rmhoist.com

SPACEMASTER® SX WIRE ROPE HOISTS

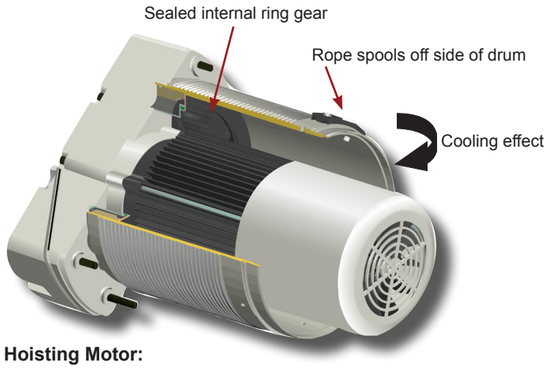

Hoisting Motor:

- Dual-speed hoisting with 6:1 ratio
- Class F insulation and IP55 protection class
- Heavy duty type 60% ED rating (exceeds 30 min. rating)
- Optimum cooling with fan and directed air flow
- Thermistors as standard (cut off at 170°C)

INNOVATIVE STANDARD FEATURES

Trolley Drive:

- Long life adjustment free compact brake
- Minimized maintenance with grease gearbox
- AGMA 11 carbonized and ground helical gearing
- Inverter duty motor with IP55 protection
- Spline fit direct drive sealed travel system

Hoist Gearbox:

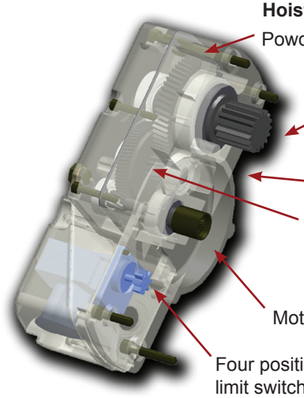

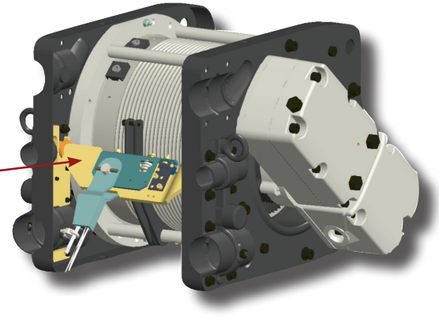

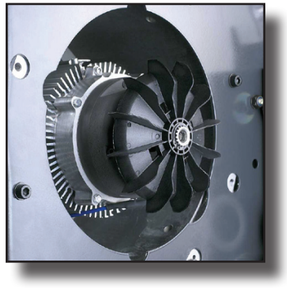

Hoisting Brake:

- 200% torque DC disk type
- Lining designed for hoist lifetime, over 1 million operations
- Sealed dust-proof
- Heavy duty
- Easy to check air gap

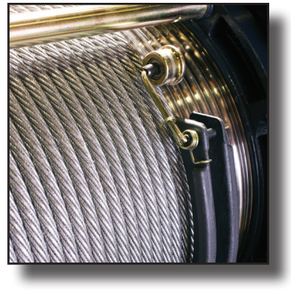

Wire Rope Drum and Guide:

- Optimized dimensions - Excellent hook approaches
- Longer lifetime - Minimum drum to rope ratio = 40:1
- Minimal hook drift +/- 1/8” per ft of travel
- Ductile Iron rope guide
- Minimal rope bending
- Lower pressure on drum bearing
- Galvanized wire rope

www.rmhoist.com

QX® MODULAR CRANE PACKAGES

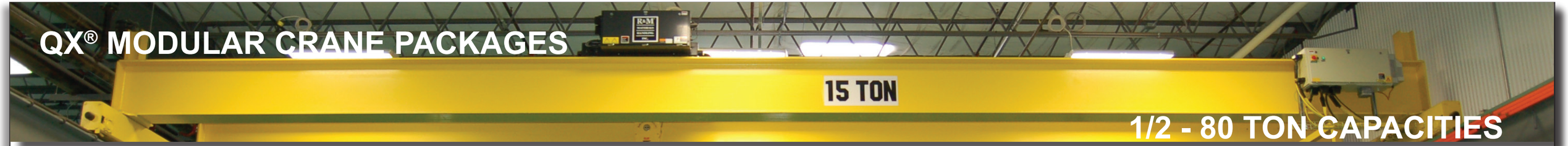

1/2 - 80 TON CAPACITIES

QX® Modular Crane Packages are pre-engineered, complete crane component packages utilizing cutting edge technology. Variable frequency drives are standard on trolley and bridge motions for smooth starts and stops. Plug-in cabling* and bolted structural connections simplify assembly. QX® Modular Crane Packages are equipped with your choice of C-track festoon system or the new NRGmaster electrification system.

Plug-in Festoon Connections

Standard Bolted Girder Connection Plates

Bridge Controls Standard Features:

- Standard inverter offers two speed or 2-step infinitely variable speed control
- CSA c/us approved NEMA 3R type rated control enclosures
- Mainline disconnect switch (mounted in door)
- Mainline contactor
- 115 volt transformer with fused secondary

C-track Festoon Electrification System:

- PVC flat cables are UL & CSA listed
- Suspended from galvanized steel C-track
- All crane motions can be controlled from a convenient plug-in push button station (8 buttons including emergency stop button)
- Independent C-track for pendant station allows operator to be positioned at a safe distance from load

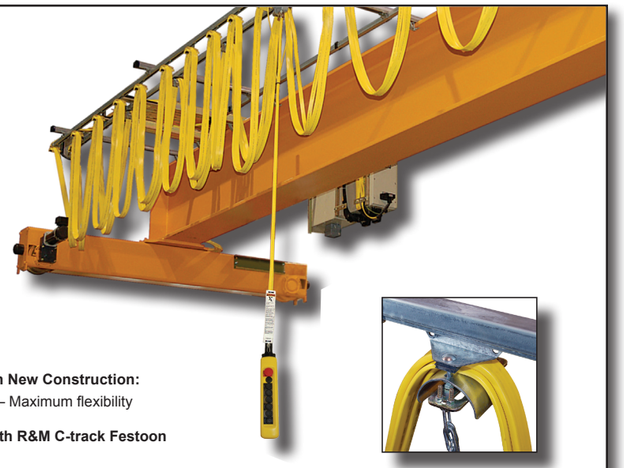

Galvanized Steel Cable Trolleys on C-track Festoon

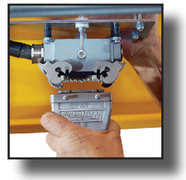

Plug-in Pendant Connection

Spacemaster® SX Clearances = Space Savings in New Construction:

- Unmatched clearances — Lower operating cost — Maximum flexibility

Building with Competition's Crane **Building with R&M C-track Festoon**

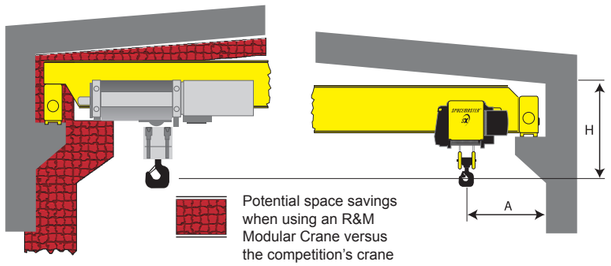

Potential space savings when using an R&M Modular Crane versus the competition's crane

A: Distance from hook to wall
H: Distance from hook to ceiling

NRGmaster Electrification System:

- Decrease maintenance pitfalls associated with traditional C-track festoons
- Radio control is standard

NRGmaster Electrification System = The Most Space Savings in New Construction

- Unmatched clearances − The floor area under your new crane can now be used more efficiently − Better hook to wall dimensions (A) compared to the competition
- Lower roof heights/maximum lifting heights − Your new building design can be smaller and more functional giving you savings in initial construction. Better hook to ceiling dimensions (H) compared to the competition
- Lower operating costs − Continual savings in heating and/or air conditioning expenses over the lifetime of your building
- Maximum flexibility − Factory layout and material flow planning is optimized

Figure 1. C-track Festoon

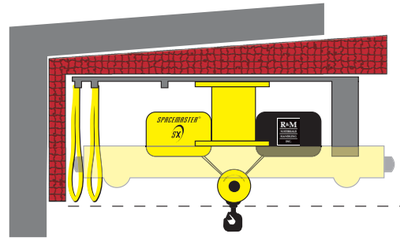

Figure 2. NRGmaster Electrification System

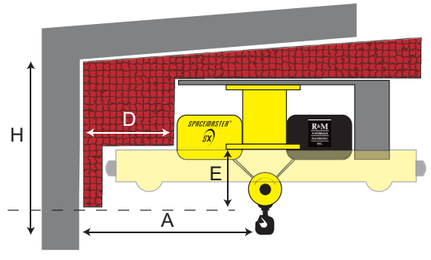

Potential space savings when using R&M's QX modular crane package versus competitors' cranes (Figure 1) and the added space savings versus standard C-track festoon system cranes (Figure 2)

A. Decreased distance from hook to wall (versus C-track festoon cranes)
D. Increased inner span distance to wall (no festoon obstruction)
E. Less obstructions from floor to girder (no dangling cables)
H. Decreased distance from hook to ceiling (versus competitors cranes)

*Plug-in connections not available for all packages. Refer to the Spacemaster® SX Wire Rope Hoist Technical Guide for more information.

VALUE ADDED CRANE COMPONENTS

Variable Speed Controls:
R&M's ControlMaster® variable frequency drive series offers more versatility, better performance and prolonged equipment life than industry-standard contactor motor controls.

- ControlMaster® Plus and ControlMaster® Elite Variable Frequency Drives
- Cost effective open loop control with speed supervision, or closed loop control
- Controlled acceleration and deceleration
- Multi-step (MS) speed control or infinitely variable (EP) speed control of hoist

ControlMaster® CMNXT
- Offered in two sizes: 2.4 amps or 5.6 amps
- Parameters: selected via 26 dip switches
- Speed control methods: EP-2 or MS-2
- Travel limits available in both sizes

HoistMonitor®:
The HoistMonitor® assist in the safe operation, maintenance and performance of the hoist and crane by constantly monitoring and recording selected functions.

Three HoistMonitor® configurations are available: the basic HoistMonitor®; HoistMonitor® Select and HoistMonitor® Elite. In addition, various options are available for each of the configurations. The HoistMonitior® Select and the HoistMonitor® Elite can be used individually or jointly to provide customized functionality. The HoistMonitor® Select allows for more efficient planning and scheduling of preventative maintenance and repairs. Refer to the Spacemaster® SX Wire Rope Hoist Technical Guide for detailed function descriptions.

PD

RaCon® III Radio Control

GES/GEK Bridge Drives

Top Running & Under Running End Trucks

Your Distributor Contact Is:

R&M Materials Handling, Inc. may alter or amend the technical specifications identified herein at any time with or without notice. © 2013, R&M Materials Handling, Inc. Bulletin No. #WRH-2013

R&M MATERIALS HANDLING INC.®
R&M Materials Handling, Inc.
4501 Gateway Blvd.
Springfield, Ohio 45502
PH: 937-328-5100
FAX: 937-325-5319
1-800-955-9967

R&M MATERIALS HANDLING, INC. 85 YEARS ANNIVERSARY 1929-2014

Have a question?
Need a Quote?
Looking for a Distributor?
TAKE IT UP WITH R&M
www.rmhoist.com

TAKE IT WITH R&M
1.800.955.9967